1

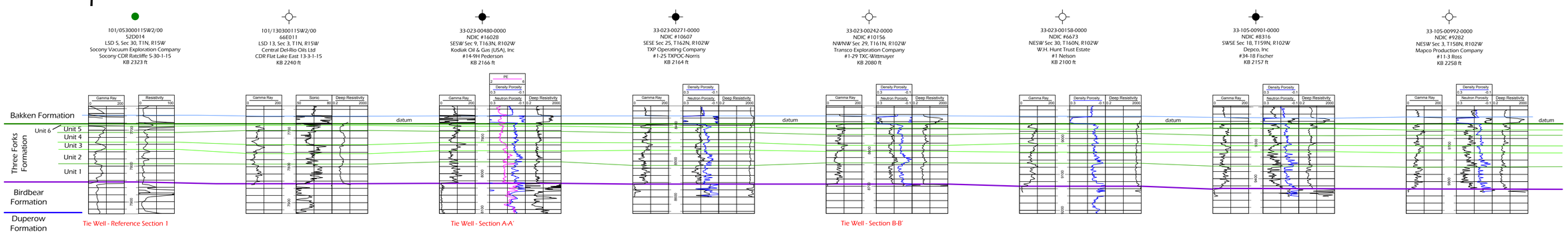
101/053000115W2/00
52D014
LSD 5, Sec 30, T1N, R15W
Socony Vacuum Exploration Company
Socony CDR Ratcliffe 5-30-1-15
KB 2323 ft
101/130300115W2/00
66E011
LSD 13, Sec 3, T1N, R15W
Central Del-Rio Oils Ltd
CDR Flat Lake East 13-3-1-15
KB 2240 ft
33-023-00480-0000
NDIC #16028
SESW Sec 9, T163N, R102W
Kodiak Oil & Gas (USA), Inc
#14-9H Pederson
KB 2166 ft
33-023-00271-0000
NDIC #10607
SESE Sec 25, T162N, R102W
TXP Operating Company
#1-25 TXPOC-Morris
KB 2164 ft
33-023-00242-0000
NDIC #10156
NWNW Sec 29, T161N, R102W
Transco Exploration Company
#1-29 TXC-Wittmayer
KB 2080 ft
33-023-00158-0000
NDIC #6673
NESW Sec 30, T160N, R102W
W.H. Hunt Trust Estate
#1 Nelson
KB 2100 ft
33-105-00901-0000
NDIC #8316
SWSE Sec 18, T159N, R102W
Depco, Inc
#34-18 Fischer
KB 2157 ft
33-105-00992-0000
NDIC #9282
NESW Sec 3, T158N, R102W
Mapco Production Company
#11-3 Boss
KB 2258 ft
Bakken Formation
Three Forks Formation
Unit 6
Unit 5
Unit 4
Unit 3
Unit 2
Unit 1
Birdbear Formation
Duperow Formation
datum
Tie Well - Reference Section 1
Tie Well - Section A-A'
Tie Well - Section B-B'

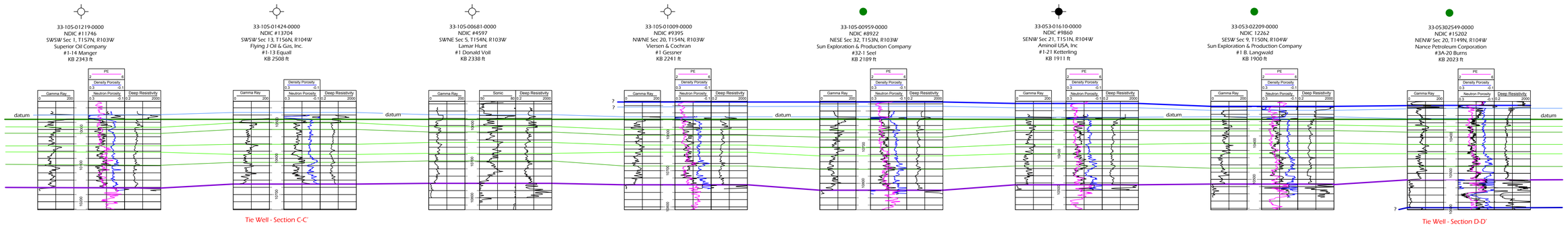
33-105-01219-0000
NDIC #11746
SWSW Sec 1, T157N, R103W
Superior Oil Company
#1-14 Manger
KB 2343 ft
33-105-01424-0000
NDIC #13704
SWSW Sec 13, T156N, R104W
Flying J Oil & Gas, Inc.
#1-13 Equall
KB 2508 ft
33-105-00681-0000
NDIC #4597
SWNE Sec 5, T154N, R103W
Lamar Hunt
#1 Donald Voll
KB 2338 ft
33-105-01009-0000
NDIC #9395
NWNE Sec 20, T154N, R103W
Viersen & Cochran
#1 Gessner
KB 2241 ft
33-105-00959-0000
NDIC #8922
NESE Sec 32, T153N, R103W
Sun Exploration & Production Company
#32-1 Seel
KB 2189 ft
33-053-01610-0000
NDIC #9860
SENW Sec 21, T151N, R104W
Aminoil USA, Inc
#1-21 Ketterling
KB 1911 ft
33-053-02209-0000
NDIC 12262
SESW Sec 9, T150N, R104W
Sun Exploration & Production Company
#1 B. Langwald
KB 1900 ft
33-053-02302549-0000
NDIC #15202
NENW Sec 20, T149N, R104W
Nance Petroleum Corporation
#3A-20 Burns
KB 2023 ft
datum
Tie Well - Section C-C'
Tie Well - Section D-D'

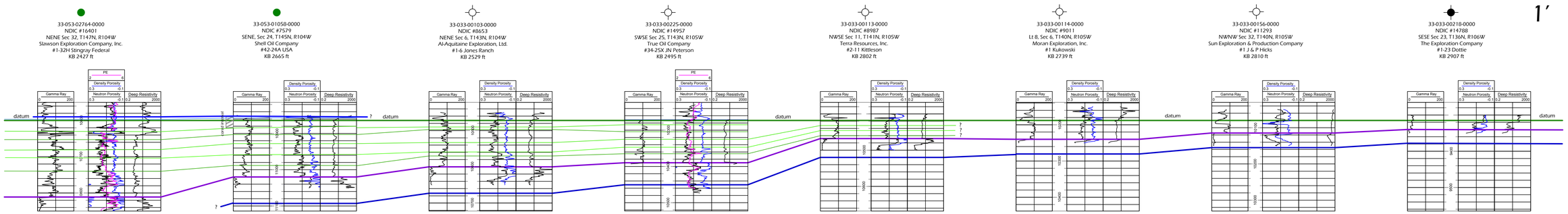
33-053-02764-0000
NDIC #16401
NENE Sec 32, T147N, R104W
Slawson Exploration Company, Inc.
#1-32H Stingray Federal
KB 2427 ft
33-053-01058-0000
NDIC #7579
SENE, Sec 24, T145N, R104W
Shell Oil Company
#42-24A USA
KB 2865 ft
33-033-00103-0000
NDIC #8653
NENE Sec 6, T143N, R104W
Al-Aquitaine Exploration, Ltd.
#1-6 Jones Ranch
KB 2529 ft
33-033-00225-0000
NDIC #14957
SWSE Sec 25, T143N, R105W
True Oil Company
#34-25X JN Peterson
KB 2495 ft
33-033-00113-0000
NDIC #8987
NWSE Sec 11, T141N, R105W
Terra Resources, Inc.
#2-11 Kittleson
KB 2802 ft
33-033-00114-0000
NDIC #9011
Lt 8, Sec 6, T140N, R105W
Moran Exploration, Inc.
#1 Kulkowski
KB 2739 ft
33-033-00156-0000
NDIC #11293
NWNW Sec 32, T140N, R105W
Sun Exploration & Production Company
#1 J & P Hicks
KB 2810 ft
33-033-00218-0000
NDIC #14788
SESE Sec 23, T136N, R106W
The Exploration Company
#1-23 Dottie
KB 2907 ft
datum
Tie Well - Section E-E'

2

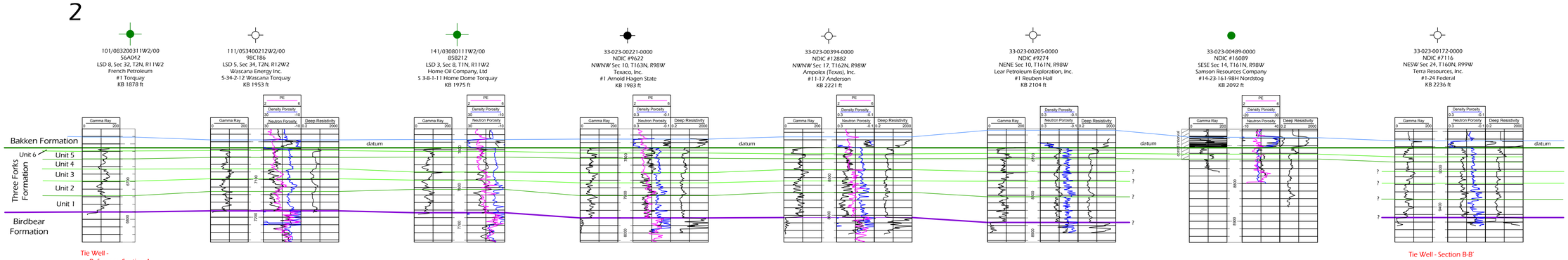
101/083200311W2/00
56A042
LSD 8, Sec 32, T2N, R11W2
French Petroleum
#1 Torquay
KB 1878 ft
111/053400212W2/00
98C186
LSD 5, Sec 34, T2N, R12W2
Wascana Energy Inc.
S-34-2-12 Wascana Torquay
KB 1953 ft
141/030801111W2/00
85B212
LSD 3, Sec 8, T1N, R11W2
Home Oil Company, Ltd
S 3-8-1-11 Home Dome Torquay
KB 1975 ft
33-023-00221-0000
NDIC #9622
NWNW Sec 10, T163N, R98W
Texaco, Inc.
#1 Arnold Hagen State
KB 1983 ft
33-023-00394-0000
NDIC #12882
NWNW Sec 17, T162N, R98W
Ampolex (Texas), Inc.
#11-17 Anderson
KB 2221 ft
33-023-00205-0000
NDIC #9274
NENE Sec 10, T161N, R98W
Lear Petroleum Exploration, Inc.
#1 Reuben Hall
KB 2104 ft
33-023-00489-0000
NDIC #16089
SESE Sec 14, T161N, R98W
Samson Resources Company
#14-23-161-98H Nordstog
KB 2092 ft
33-023-00172-0000
NDIC #7116
NESW Sec 24, T160N, R99W
Terra Resources, Inc.
#1-24 Federal
KB 2236 ft
Bakken Formation
Three Forks Formation
Unit 6
Unit 5
Unit 4
Unit 3
Unit 2
Unit 1
Birdbear Formation
datum
Tie Well - Reference Section 1
Tie Well - Section B-B'